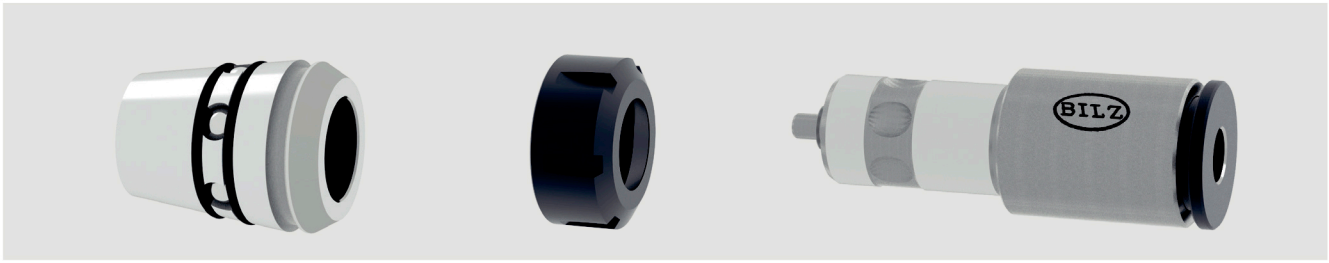

Synchro location (STL)			
Size	**Location Machine**	**Designation**	**Ident No.**
2	ER16	STL2-K1-ER16	5099865
3	ER20	STL3-K1-ER20	5099856
4	ER25	STL4-K1-ER25	5099833
5	ER32	STL5-K1-ER32	5092917

Clamping nut
Ident No.
4600340
5056874
4600341
4600342

Synchro tool head (STH)			
D1 x □ mm	**Thread sizes**	**Designation**	**Ident No.**
3,5x2,7	M3 ; M5	STH2-0350X0270-24-K1	5100071
4,5x3,4	M4 ; M6	STH2-0450X0340-24-K1	5100078
5x4	M4 ; M5	STH2-0500X0400-24-K1	5100087
6,0x4,9	M5 ; M6 ; M8	STH3-0600X0490-35-K1	5113800
7,0x5,5	M7 ; M9 ; M10	STH3-0700X0550-35-K1	5100015
7,0x5,5	M7 ; M9 ; M10	STH4-0700X0550-30-K1	5099927
8,0x6,2	M8 ; M11	STH4-0800X0620-30-K1	5099948
9,0x7,0	M9 ; M12	STH4-0900X0700-40-K1	5099939
8,0x6,2	M8 ; M11	STH5-0800X0620-37-K1	5100155
9,0x7,0	M9 ; M12	STH5-0900X0700-37-K1	5092928
10,0x8,0	M10	STH5-1000X0800-37-K1	5100154
11,0x9,0	M14	STH5-1100X0900-37-K1	5100157
12,0x9,0	M12 ; M16	STH5-1200X0900-37-K1	5100156

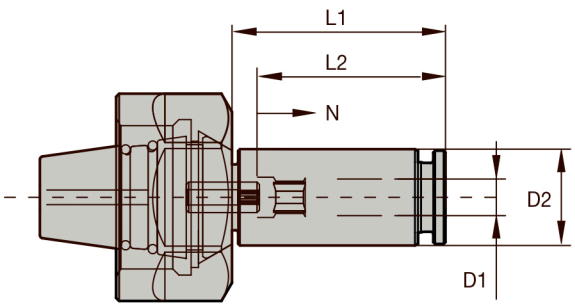

Synchro adaptor complete (STA)							
Size	**D1**	**D2**	**L1**	**L2**	**N**	**Torque for clamping nut max. Nm**	**Transmissible torque max. Nm.**
2	3,5	12,7	24	26	2	40	10
	4,5	12,7	24	26	2		
	5	12,7	24	27	2		
3	6	15,8	35	30,5	3	40	18
	7	15,8	35	30,5	3		
4	7	19	30	33	3	80	28
	8	19	30	34	3		
	9	19	40	35	3		
5	8	25	37	40	3	130	50
	9	25	37	41	3		
	10	25	37	42	3		
	11	25	37	43	3		
	12	25	37	43	3		

SET 1 1st STL2-K1-ER16 och 1st STH2- ... = 998 SEK/Set Netto
SET 3 1st STL3-K1-ER20 och 1st STH3- ... = 998 SEK/Set Netto
SET 4 1st STL4-K1-ER25 och 1st STH4- ... = 998 SEK/Set Netto
SET 5 1st STL5-K1-ER32 och 1st STH5- ... = 998 SEK/Set Netto